# Hampton
## LED MIRROR 900MM

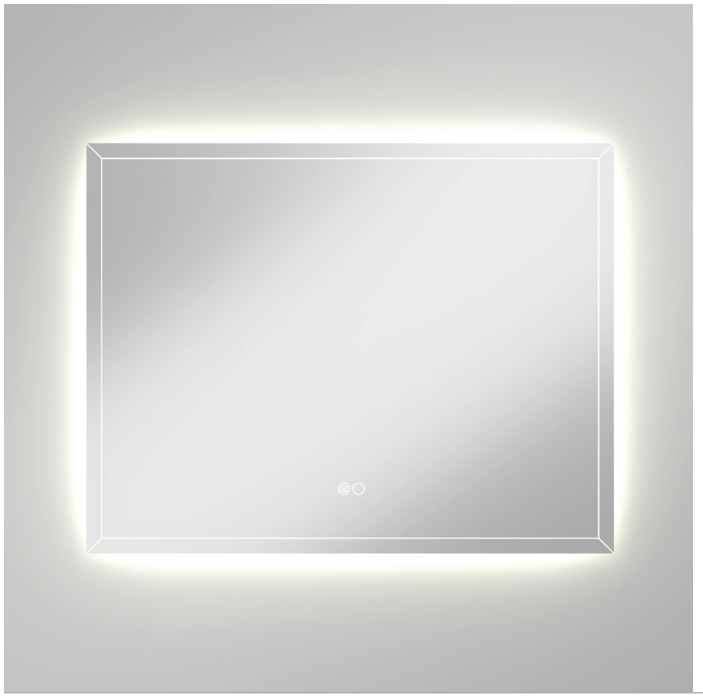

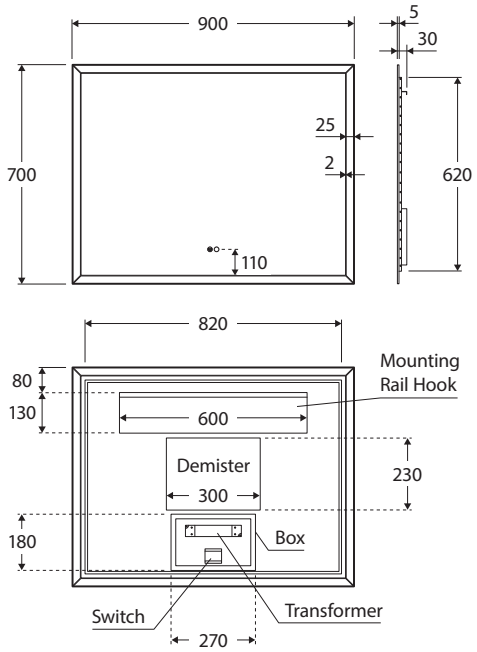


## Features

- Adjustable colour temperature (6000, 4000 or 3000K)
- Built-in demister
- Illuminating touch sensors for light and demister
- 5 mm thick glass mirror with inset illuminated accent
- Copper-free to prevent corrosion
- Includes wall mounting screws and anchor plugs
- Supplied in extra strong packaging for added protection
- 220-240V AC 50/60Hz
- IP44 rating
- SAA approved

## Available in



900W x 700H mm

**LED01-90**

Adjustable Colour Temperature

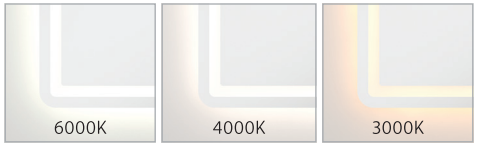


## Cleaning & Care

For best results, clean mirrors with a combination of 30% methylated spirits to 70% water and a soft, non-abrasive cloth designed for use on glass surfaces.

## Installation

Mirror must be installed by a licensed electrician in accordance with local regulations.

While we aim to ensure specifications are correct at the time of publication, Fienza reserves the right to make modifications without prior notice. Physical colour may vary from image shown.
All measurements are shown in millimetres. Always use physical product measurements for mark-ups and roughing-in as the technical drawing may differ from actual product received.