OAKLEY RAIL SHOWER

1910000 | Chrome
1910001 | Brushed Nickel
1910007 | Matte Black

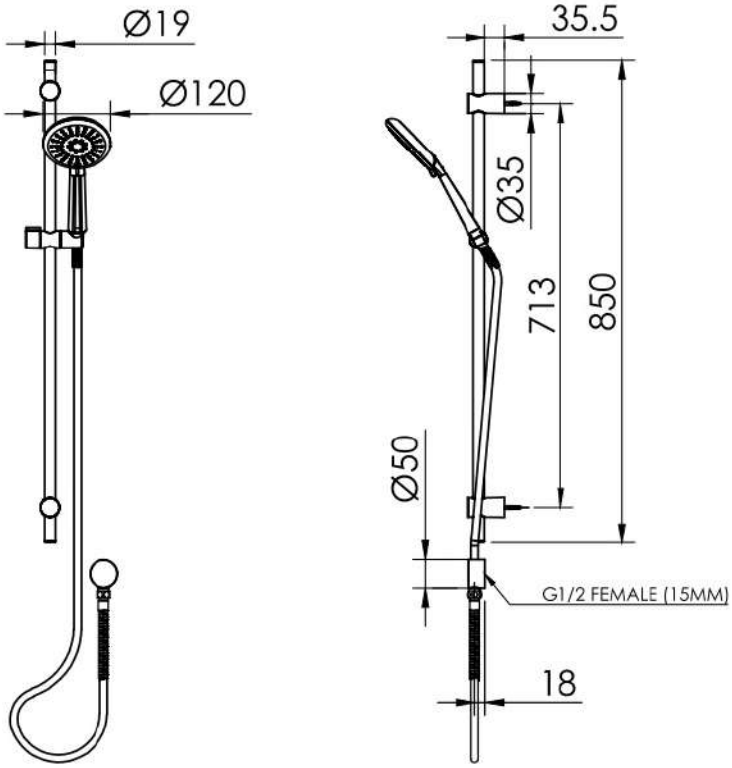

NZ: 0800 655 455 | nzsales@greenstapware.com
AU: 1800 244 992 | aussales@greenstapware.com

GREENS | TAPWARE