Design | AMICI +

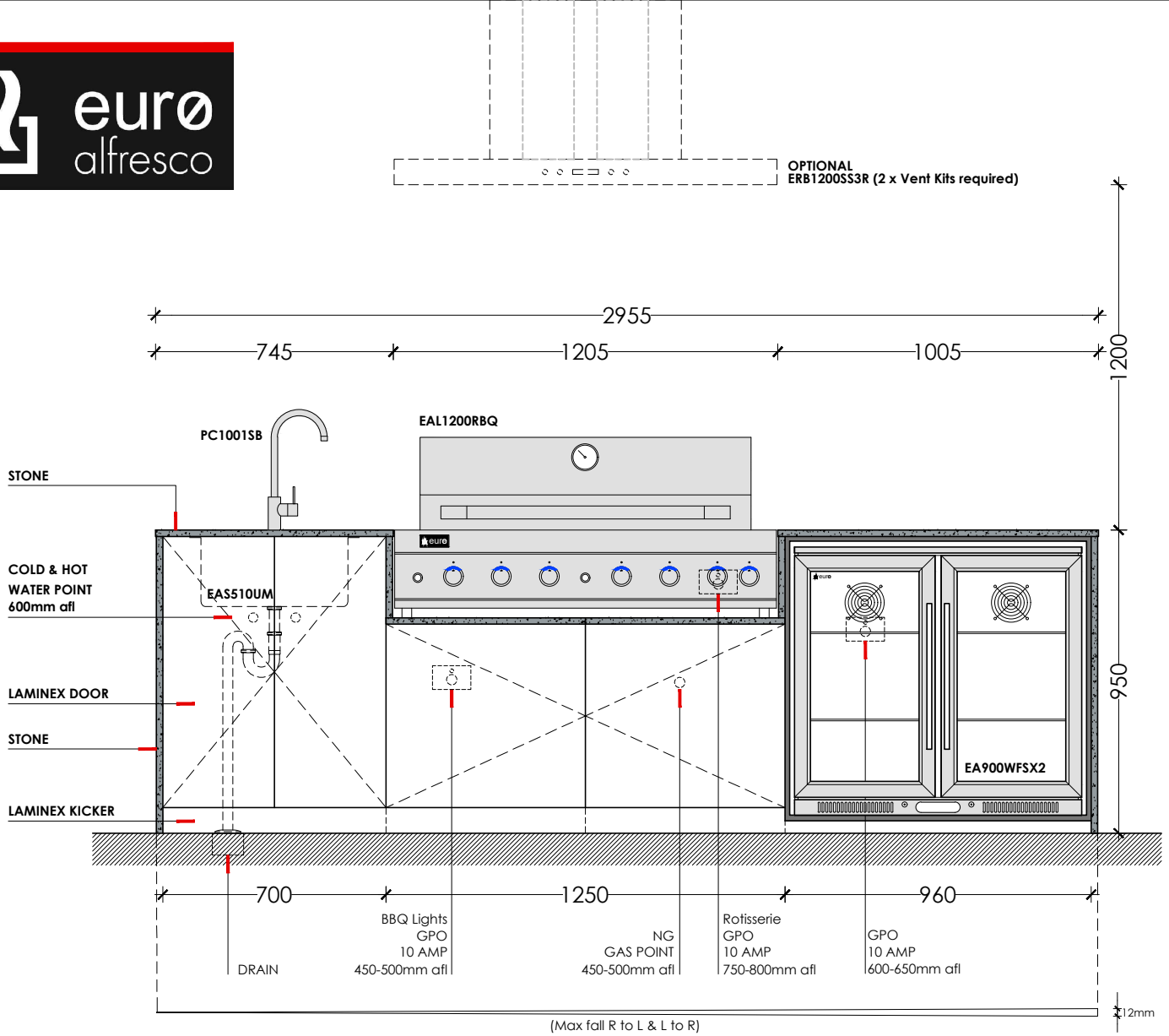

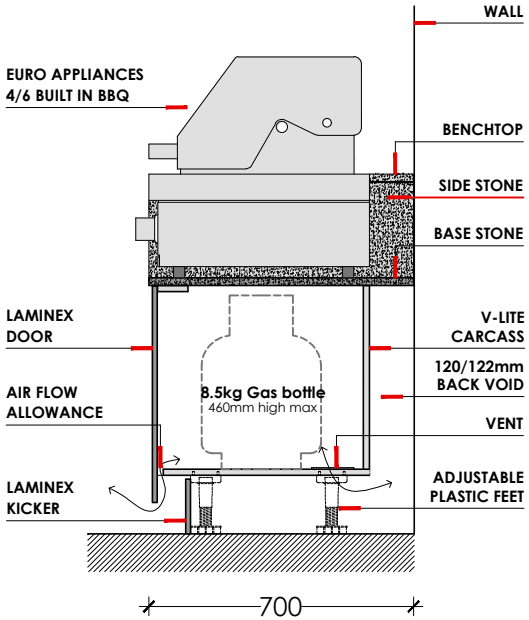

Notes :
The alfresco area must comply with your States - Gas Acts, Regulations and Standards to be able to install a Euro Alfresco kitchen.
Quoted for standard waterfall stone ends of 930mm high. It should be noted that a non-level surface will require a custom waterfall stone end to be cut, incurring an additional fee.
The service handout applies to a standard model kitchen. Services need to be changed according to your kitchen special layout. (ie. Reverse side sink& tap...etc.) Stone Depth +-700mm and Stone thickness +- 2mm.

DESIGN	OPTIONAL		APPLIANCES		CARCASS	DOORS	KICKERS	BOARD	STONE	COLOUR
AMICI +	EALNGCK	NG Kit	PC1001SB	Sink Mixer	HN7002D	AC7002DD	AC7002DK	N/R	745 S	**STONE**
	EALPGTP	LPG Kit	EAS510UM	Sink	HN12502DBQ	AC12502DBQD	AC12502DBQK		255 x 2	TBA
	EADC30CM	Domino Cover	EAL1200RBQ	LPG BBQ	HN960DWF	N/R	AC960DWFK		625 X 2	**DOOR**
	ERB120SS3R	Canopy	EA900WFSX2	Bev. Cooler					1155 (to 1005)	TBA
SIZE	VENT KIT								930 x 2	**KICKER**
2955mm										TBA