Design | VIVA

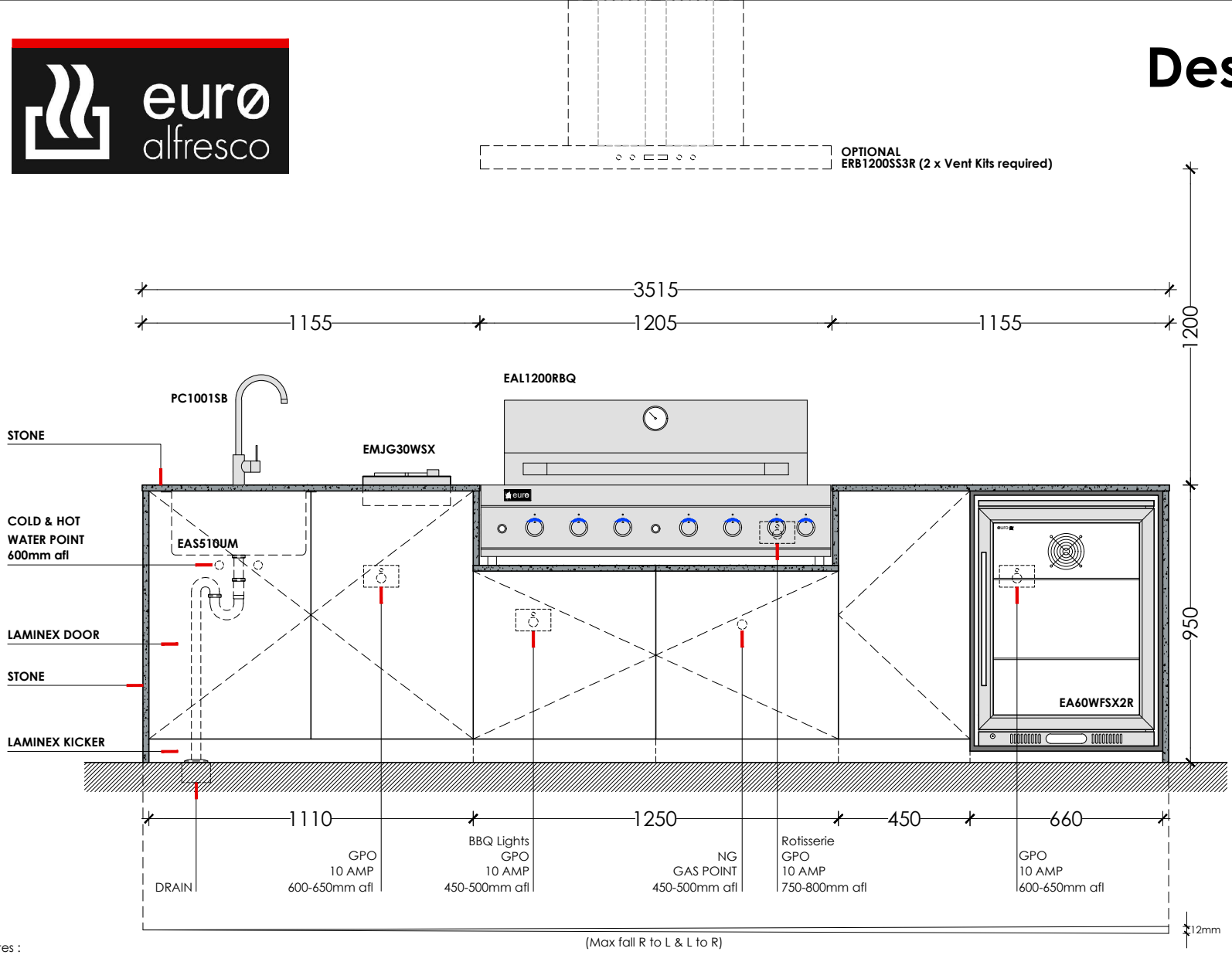

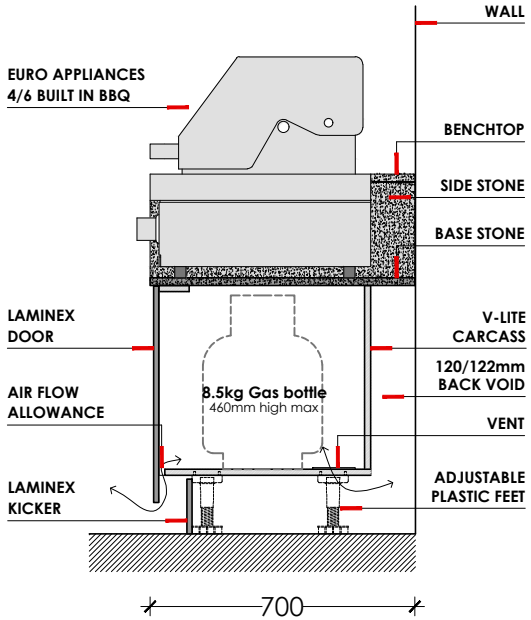

Notes :
The alfresco area must comply with your States - Gas Acts, Regulations and Standards to be able to install a Euro Alfresco kitchen.
Quoted for standard waterfall stone ends of 930mm high. It should be noted that a non-level surface will require a custom waterfall stone end to be cut, incurring an additional fee.
The service handout applies to a standard model kitchen. Services need to be changed according to your kitchen special layout. (ie. Reverse side sink& tap...etc.) Stone Depth +-700mm and Stone thickness +- 2mm.

DESIGN	OPTIONAL		APPLIANCES		CARCASS	DOORS	KICKERS	BOARD	STONE	COLOUR
VIVA	EALNGCK	NG Kit	PC1001SB	Sink Mixer	HN11102D	AC11102DD	AC11102DK	N/R	1155 SD	**STONE**
	EALPGTP	LPG Kit	EAS510UM	Sink	HN12502DBQ	AC12502DBQD	AC12502DBQK		255 x 2	TBA
	EADC30CM	Domino Cover	EMJG30WSX	Wok Burner	HN4501D	AC4501DD	AC4501DK		625 X 2	**DOOR**
	ERB120SS3R	Canopy	EAL1200RBQ	LPG BBQ	HN660DWF	N/R	AC660DWFK		1155	TBA
	VENT KIT		EA60WFSX2R	Bev. Cooler					930 x 2	**KICKER**
SIZE										TBA
3515mm										