GARETH ASHTON

RHB07

CURVE RAIN & HAND SHOWER ENSEMBLE

In-Built Diverter
WELS Rating 3 Star 8.0L/min
WELS Registration #S15325 (Chrome) #S15325(v) (Finishes)

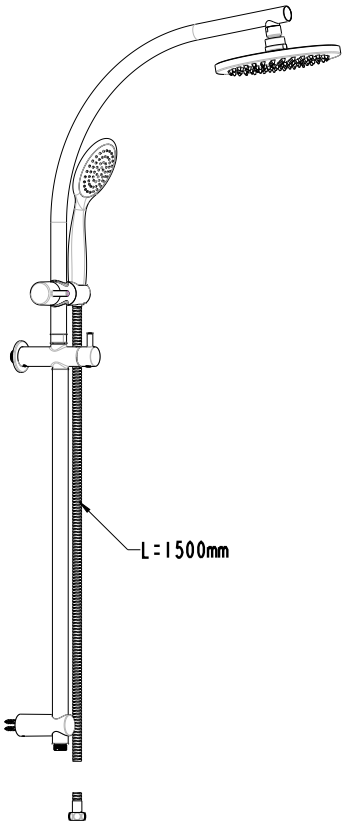

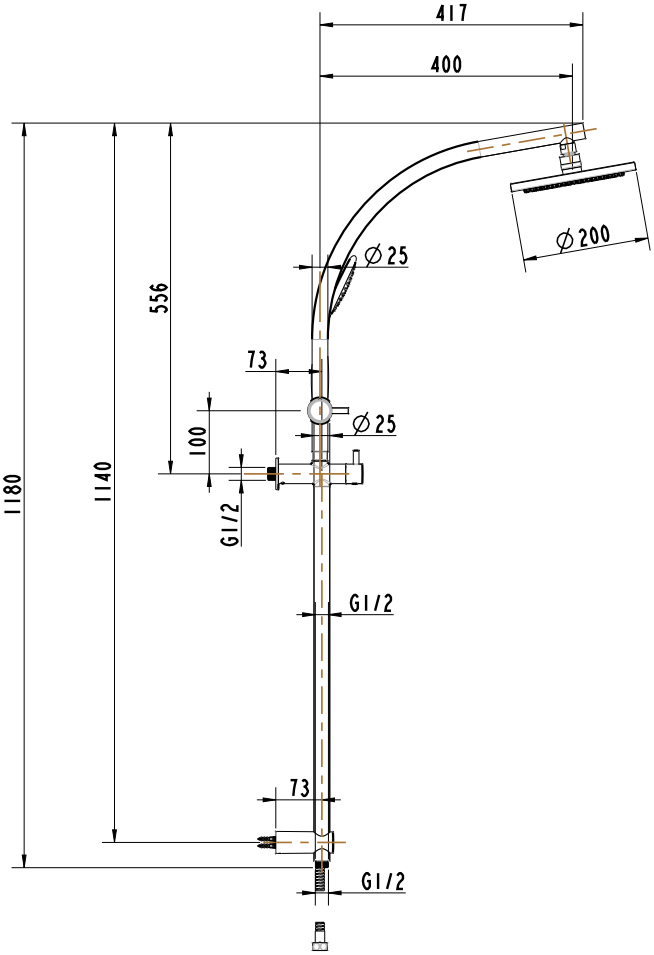

AVAILABLE IN

- RHB07 (CHROME)
- RHB07-B (BLACK)
- RHB07-BN (BRUSHED NICKEL)
- RHB07-GM (GUN METAL)
- RHB07-BB (BRUSHED BRASS)

P: 1800 809 143 **E: mail@abey.com.au** **W: www.abey.com.au**

abey AUSTRALIA

The information provided is a representation of the product depicted at this time. The designs and specifications are subject to change without notice. Prior to purchasing, please confirm all images, specifications, warranty and care instructions on our website at www.abey.com.au or contact our Customer Service Centre on 1800 809 143.