EMILIA

ROUND UNDER COUNTER BASIN
360mm diam.

JohnsonSuisse
Bathroom Solutions

CODE: JBSE236.PW6

FEATURES

- Contemporary vitreous china vanity basin
- Compact space-saving style
- 32mm plug and waste
- 7.0L bowl capacity

COMPONENTS

Emilia round under counter basin	JBSE236
32mm Pop-up waste	PW6

WARRANTY

Vitreous china 25 years replacement
-refer to T&Cs at www.johnsonsuisse.com.au

PRODUCT DIMENSIONS

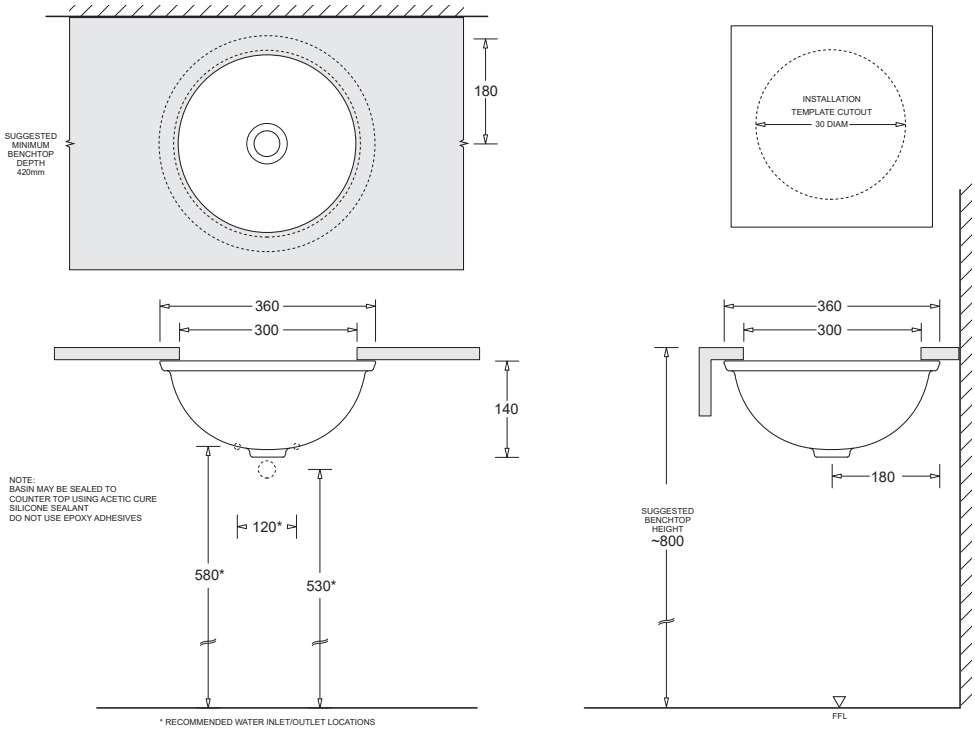

All dimensions are in millimetres and are subject to normal manufacturing variation.
As product development is ongoing BPA reserves the right to vary specifications without notice.
Bathroom Products Australia Pty Ltd ABN 87 079 297 617
1023

JohnsonSuisse
Bathroom Solutions
2/97 Banksia St.,
Botany, NSW 2019
TEL: 1300 717 717
www.johnsonsuisse.com.au