MB17
BASIN MIXER

meir®

COLD START TECHNOLOGY

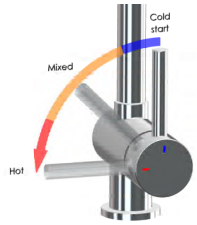

FEATURES

- Refer to the Meir website for warranty terms & conditions, and available finishes
- Flow rate 6 L p/m
- European components and cartridge
- Cold start cartridge technology
- Solid brass construction

CARE

- Do not install tapware using any form of acetone silicones.
- Do not apply physical items (such as tools) directly to product.
- Never use house-hold or commercial detergents, citrus based cleaners, or abrasive cleaners.
- Clean using a mild washing soap solution rinsed, and dry with a soft cloth.
- Check for any product defects before installation.
- Refer to the installation manual for correct installation.

SPECIFICATIONS

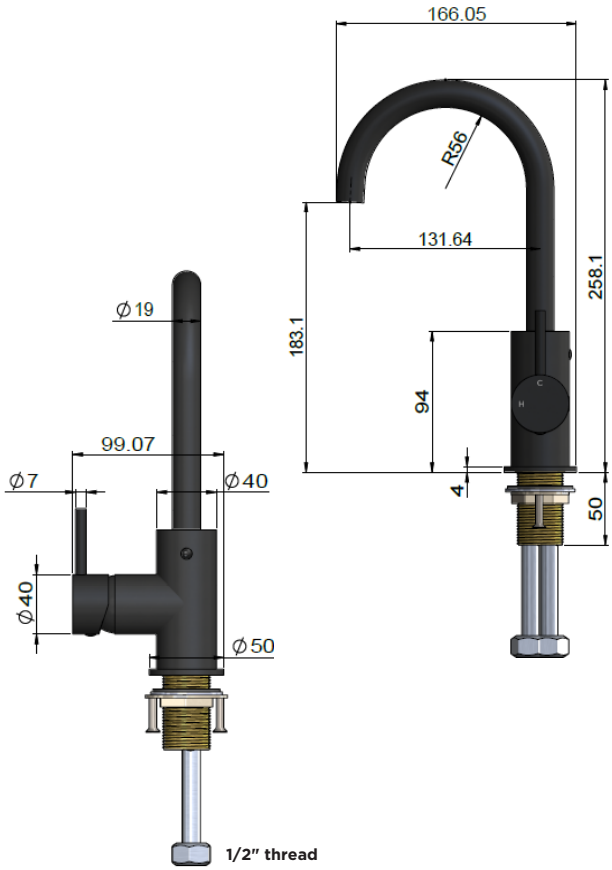

TOLERANCES

Surface Tolerance

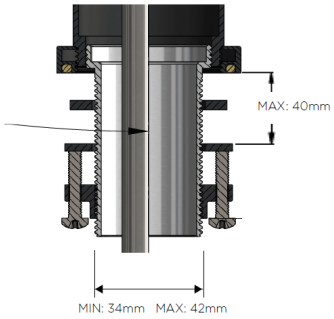

Basin Spacing

FLOW RATE GRAPH

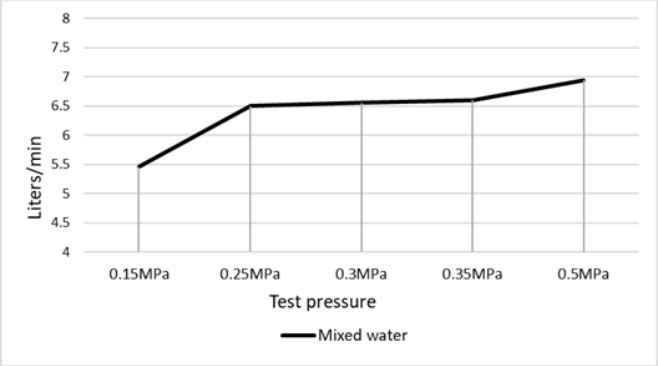

CREDENTIALS

- Watermark AS/NZS3718WMKA25013
- WELS Rated 5 Star

EXPLODED VIEW

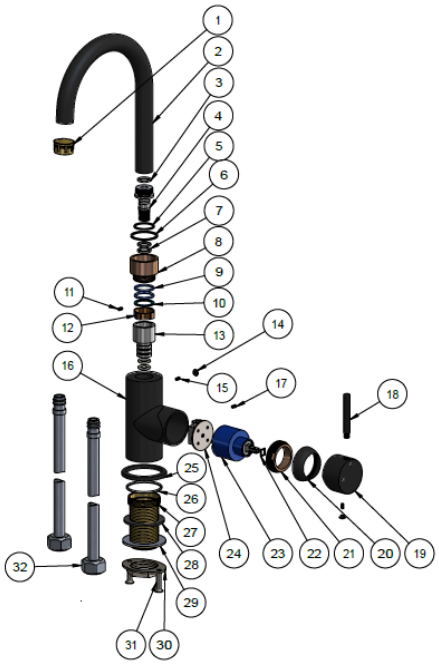

No.	Part Name	Qty.
1	Aerator	1
2	Spout	1
3	O-Ring	1
4	Connector	1
5	Washer	1
6	Flat Washer	1
7	O-Ring	4
8	Sleeve	1
9	O-Ring	2
10	Wear Ring	1
11	Screw	1
12	Nut	1
13	Connector	1
14	Button	2
15	Screw	2
16	Body	1
17	Screw	1
18	Pin Lever	1
19	Handle Cap	1
20	Decorative Cover	1
21	Nut	1
22	Washer	1
23	D35 Cartridge Cold Start	1
24	Cartridge Base	1
25	Decorative Base	1
26	O-Ring	1
27	Mounting Thread Tube	1
28	Flat Washer	1
29	Washer	1
30	Mounting Nut	1
31	Screw	2
32	SS Braided Inlet Hose	2